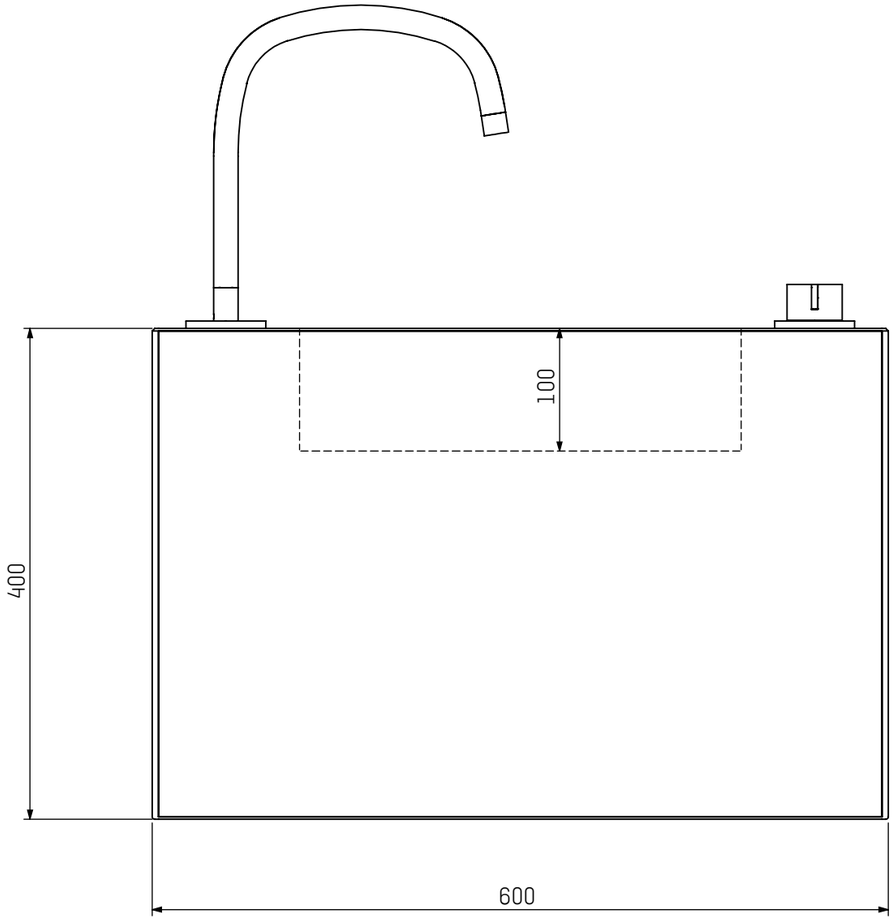

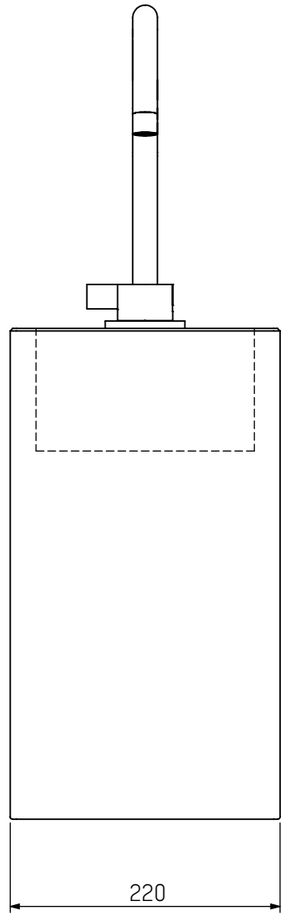

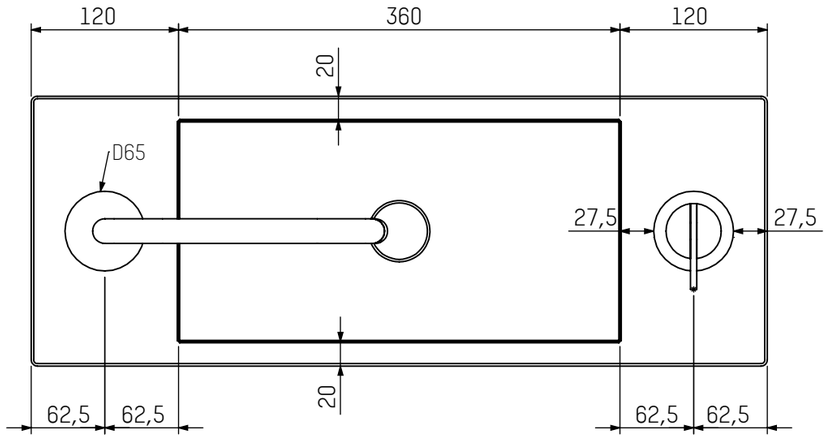

Studio Piet Boon Skoon 78 1511 HV Oostzaan The Netherlands
+31 (0)20 722 00 20 info@pietboon.com pietboon.com © 2020

STUDIO
PIETBOON

Client	Cocoon	Project	Micro Basin - vers. B				
Subject	Main dimensions			Paper	A3	Scale	1:5
Date	08 September 2020	Revised	R01	Units	mm	Page	01/01